All Stainless Steel Pressure Gauge

Bourdon Type (DIN Case)

TP35

Special Features

Stainless Steel Case, Protection IP 65/ 66
Dry or fillable version
Standard followed in general EN 837-1.

Applications

Pneumatics, Hydraulics, Pumps, Compressors, Diesel Engines and Gaseous/ Liquid Media that will not obstruct the pressure system.

STANDARD VERSION
Nominal Size: 63mm
100mm
150mm

Accuracy class	1,6
Ambient temperature	- 20°C to + 65°C
Process temperature	Max. 80°C
Operating pressure range	75% of Scale value
Over pressure limit	≤ 100 bar : 125% of Max. Scale value > 100 to ≤ 600 bar : 115% of Max. scale value
Case & Bezel	AISI 304 SS (DIN Case)
Bourdon	Copper Alloy up to 70 kg/cm^2 AISI 316L SS for 100 kg/cm^2 & above
Socket	Copper alloy
Movement	Copper alloy
Joints	Alloy Brazing / soldering
Protection	IP 65
Dial	Aluminium, black graduation on white background
Pointer	Aluminium, black coloured Fixed
Window	Plexi glass
Filling plug	Neoprene
Gasket	Neoprene
Blow off disc	Neoprene

DRY BUT FILLABLE VERSION

Fillable dampening liquid	:	Glycerine 98%
Process temperature	:	Maximum 65°C
Other features	:	Refer specification of standard version

GLYCERINE FILLED VERSION

Accuracy class	1.6
Ambient temperature	Maximum 65°C
Process temperature	Maximum 65°C
Window	Plexi glass
Dampening liquids	Glycerine 98% (others available as option)
Other features	Refer specification of standard version

TAG Technology UK Ltd

TAG TECHNOLOGY UK LTD
Instrument House PO Box 757 Altrincham
Cheshire UK WA15 5BT

T: +44 (0)161 652 7741 **E:** sales@tagtechnology.co.uk **W:** www.tagtechnology.co.uk

TYPE 1

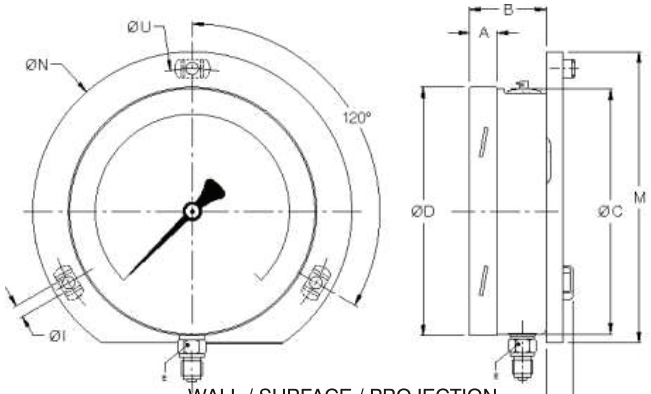

WALL / SURFACE / PROJECTION MOUNTING WITH BOTTOM ENTRY

NS	A	B	ØC	ØD	E	F	ØI	ØN	ØU	M	Weight in gram (With Box)
63	12	32	61.7	64	14	10	3.6	86	75	80	260.0
100	17.5	49	99	101	22	15	4.8	132	116	128	640.0
150	17.5	51.5	159	162	22	15	5.8	196	178	188	1270.0

TYPE 2

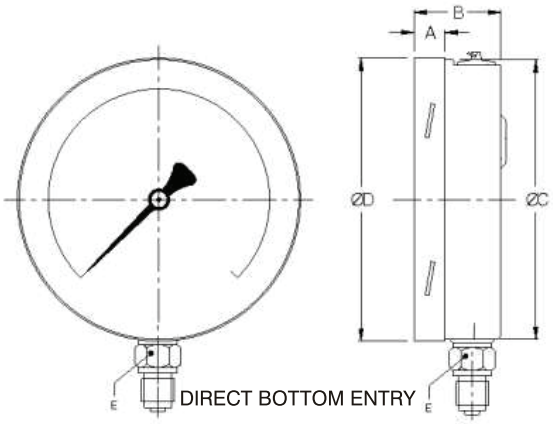

DIRECT BOTTOM ENTRY

NS	A	B	ØC	ØD	E	Weight in gram (With Box)
63	12	32	61.7	64	14	200.0
100	17.5	49	99	101	22	550.0
150	17.5	51.5	159	162	22	1100.0

TYPE 5

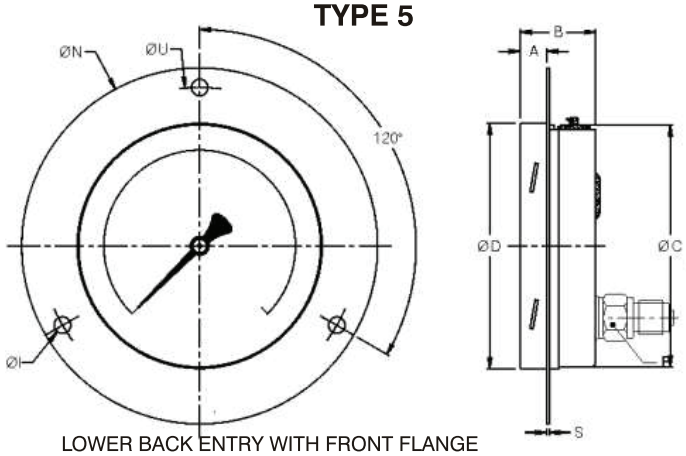

LOWER BACK ENTRY WITH FRONT FLANGE

NS	A	B	ØC	ØD	E	ØI	ØN	ØU	S	Weight in gram (With Box)
63	12	32	61.7	64	14	3.6	86	75	1	250.0
100	17.5	49	99	101	22	4.8	132	116	1	620.0
150	17.5	51.5	159	162	22	5.8	196	178	1	1160.0

TYPE 3

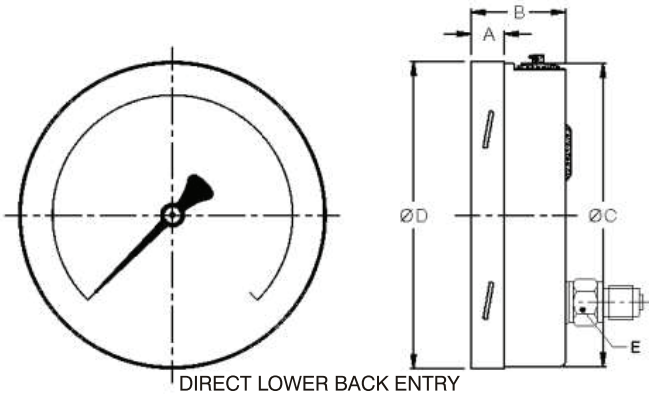

DIRECT LOWER BACK ENTRY

NS	A	B	ØC	ØD	E	Weight in gram (With Box)
63	12	32	61.7	64	14	200.0
100	17.5	49	99	101	22	540.0
150	17.5	51.5	159	162	22	1050.0

TYPE 9

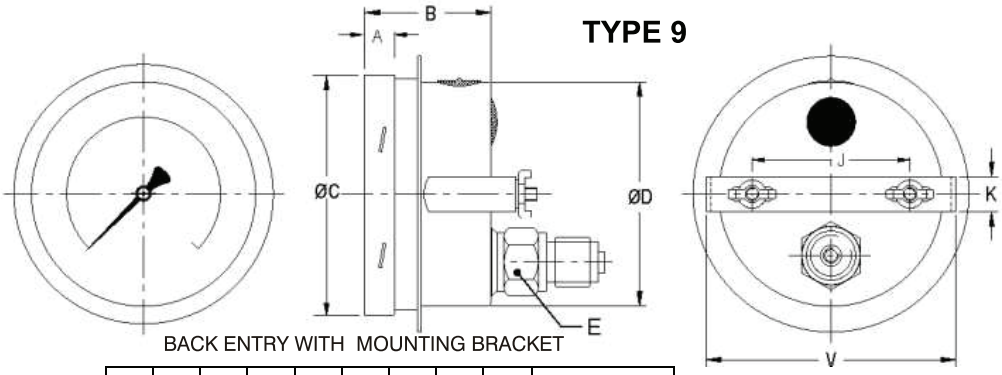

BACK ENTRY WITH MOUNTING BRACKET

NS	A	B	ØC	ØD	E	J	K	V	Weight in gram (With Box)
63	12	32	61.7	64	14	46.5	15	74	280.0
100	12.5	49	101	99	22	66.5	16	106	730.0
150	17.5	51.5	162	159	22	103.5	16	158	1200.0

TAG Technology UK Ltd

TAG TECHNOLOGY UK LTD
Instrument House PO Box 757 Altrincham
Cheshire UK WA15 5BT

T: +44 (0)161 652 7741 E: sales@tagtechnology.co.uk W: www.tagtechnology.co.uk

GAUGE CONNECTION (* Applicable for NS 63 mm.)

1/4" BSP (M) Standard*	1/4 " NPT (M)Standard*	1/2" BSPT (M)
3/8" BSP (M) Standard	1/2" NPT (M)Standard	M 20 x 1.5 (M)
1/2" BSP (M)Standard		

Note : Connections like Metric/ PT/ PF/ Flaired/ UNF/ G/ R etc can be provided on request.

RANGE

REFER RANGE TABLE

OPTIONAL EXTRAS

FIVE POINT CALIBRATION CERTIFICATE	FILLABLE LIQUID GLYCERINE
CUSTOM DESIGNED DIAL	FREON RANGE (WITH TEMPERATURE SCALE)
OXYGEN SERVICE (FOR DRY VERSION)	INTEGRAL DAMPENING SCREW (BRASS)
SS TAG PLATE	HELIUM LEAK TEST
DAMPENING LIQUID GLYCERINE FILLED	DIAL TAG MARKING (For NS 100 mm & 150 mm)
MOVEMENT WITH DAMPENING JELLY	

FOR OTHER OPTIONAL ITEMS, PLEASE CONTACT FACTORY FOR DELIVERY AND MINIMUM QUANTITY OF ORDER.